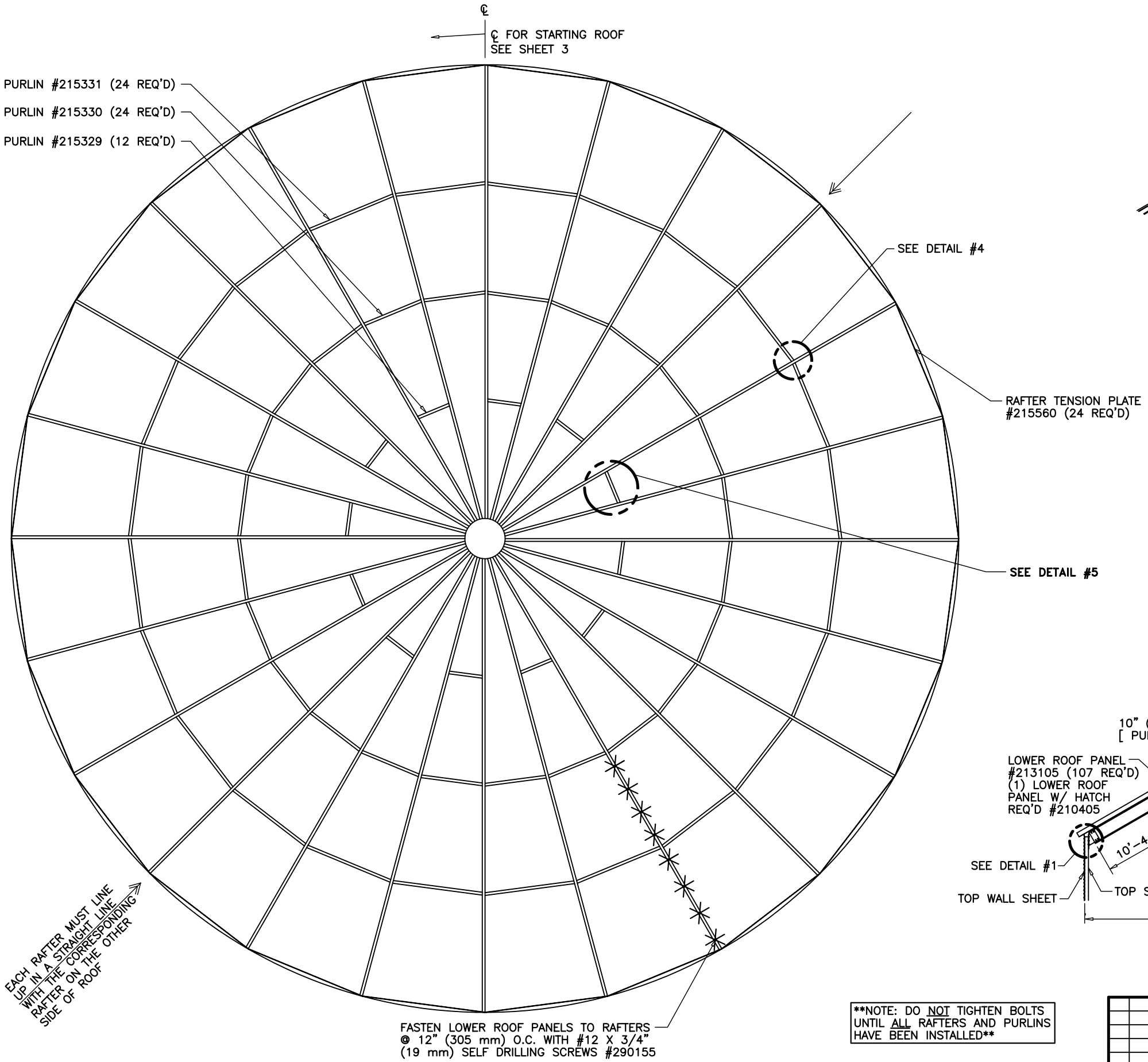

ROOF FRAMING PLAN

72' (21.95 m) DIA ROOF

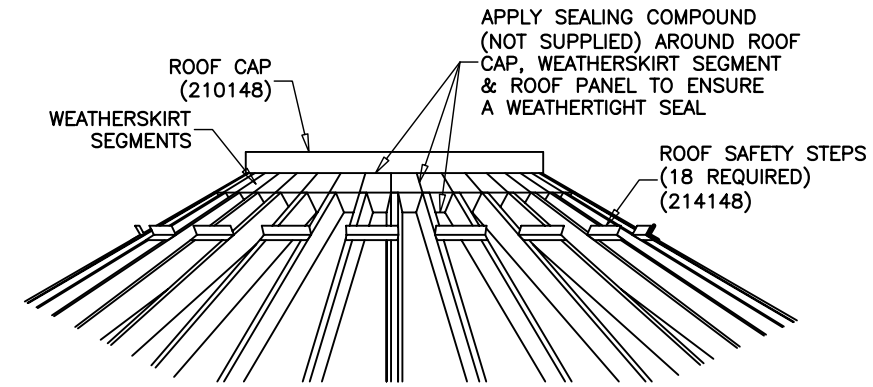

ROOF PEAK DETAIL

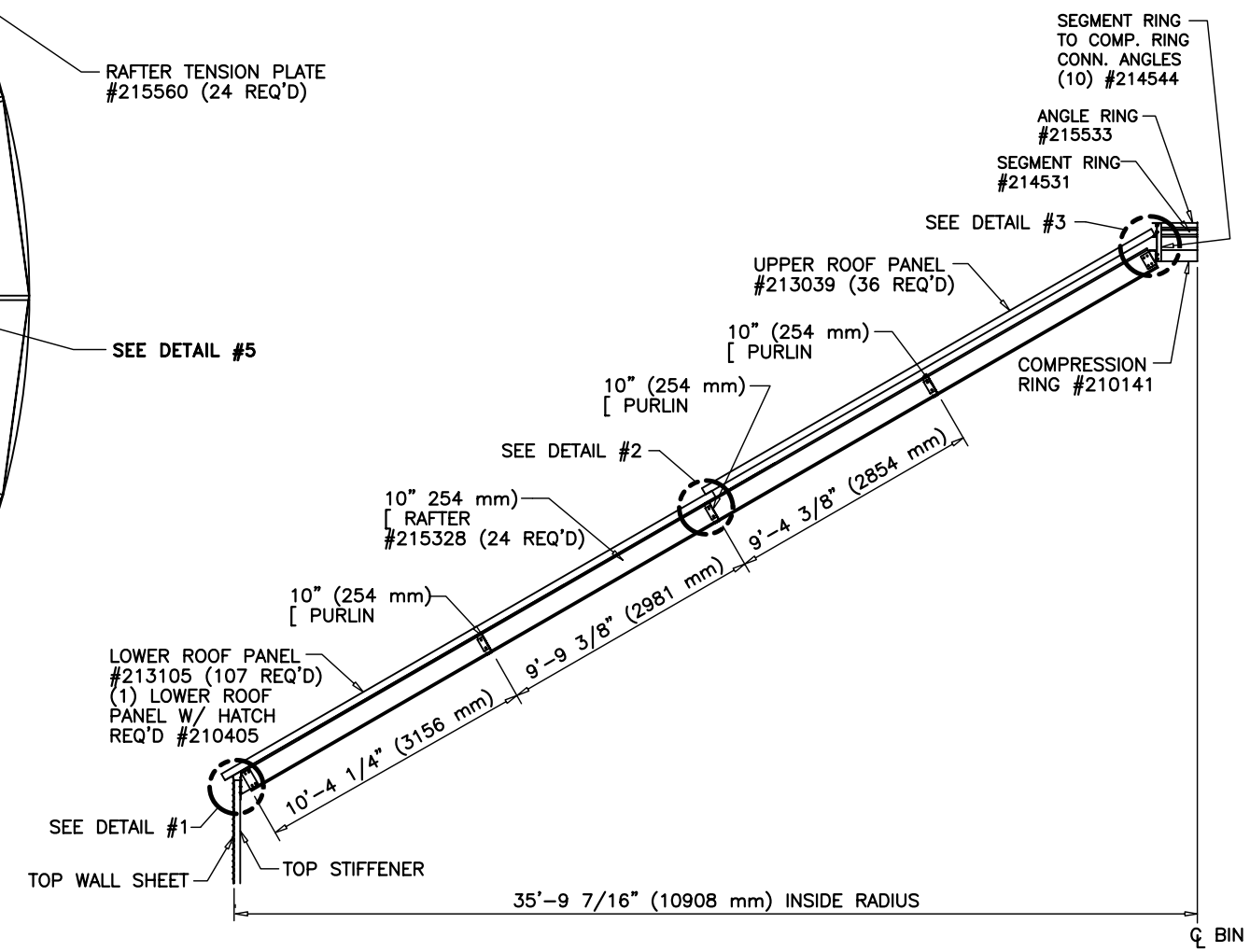

RAFTER SECTION

NOTE: DO NOT TIGHTEN BOLTS UNTIL ALL RAFTERS AND PURLINS HAVE BEEN INSTALLED

REV	BY	DATE	DESCRIPTION OF CHANGE
T	JSD	6/12/01	SEE SHEET 3 FOR REVISION
R	BW	1/5/01	REV. RAFTERS TO FACE OPPOSITE DIRECTION
P	KY	8/15/00	UPDATED RAFTERS; ADDED ANGLE RING
N	SP	6/10/99	DELETED BRACE RODS; UPDATED DWG
M	SP	10/30/98	CHG'D LOWER ROOF PANEL PART #'S
L	CAH	8/25/98	CHG'D LOWER PURLIN DETAIL FROM SELF FASTENERS TO ALUMINUM BOLT HOLES; REMOVED PURLIN TO RAFTER CLIP.
K	CAH	8/18/98	REMOVED (1) PURLIN TO RAFTER CLIP #215345
J	CAH	7/21/98	"[" PURLINS & RAFTERS WERE "Z" STYLE
H	CAH	7/14/98	SEE SHEETS 2 & 3 FOR REVISION
G	JSD	1/8/97	SEE SHEET 2 FOR REVISION

SCAFCO Grain Systems Company
6200 E. Main Avenue
PO Box 11215
Spokane, WA 99211-1215, USA
Tel: 509-535-1571 * Fax: 509-535-9130 * mail@scafco.com * www.scafco.com

ALL DIMENSIONS IN INCHES – TOLERANCES – LINEAR ±1/16", ANGULAR ±1° (Except as noted)

72' DIAMETER BIN

ROOF ERECTION INSTRUCTIONS

	BY	DATE	DRAWING NO.:	REV.
DRAWN	D DAY	6/21/82	72ROOF	R
CHECKED				
APPROVED	JT	8/5/98	SCALE: NTS	SHEET: 1 OF 3

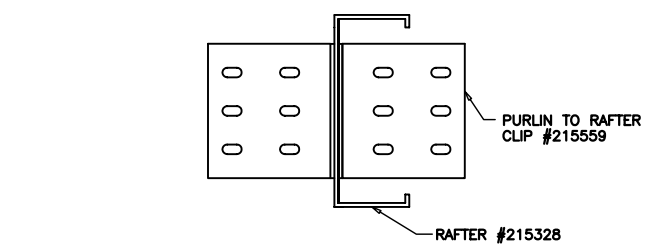

VIEW FROM DOWNHILL END OF ASSEMBLED RAFTER

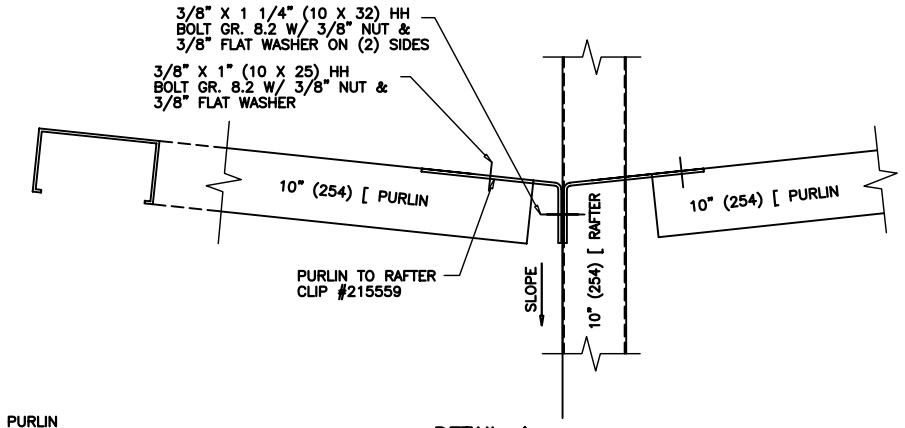

DETAIL 4
TOP VIEW OF RAFTER TO PURLIN CONNECTION

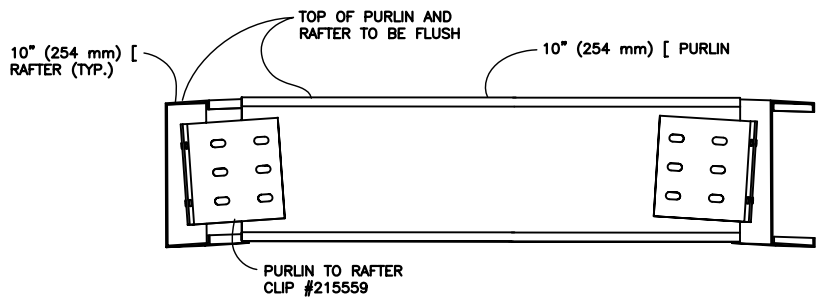

DETAIL 5
PURLIN CONNECTION BETWEEN RAFTERS

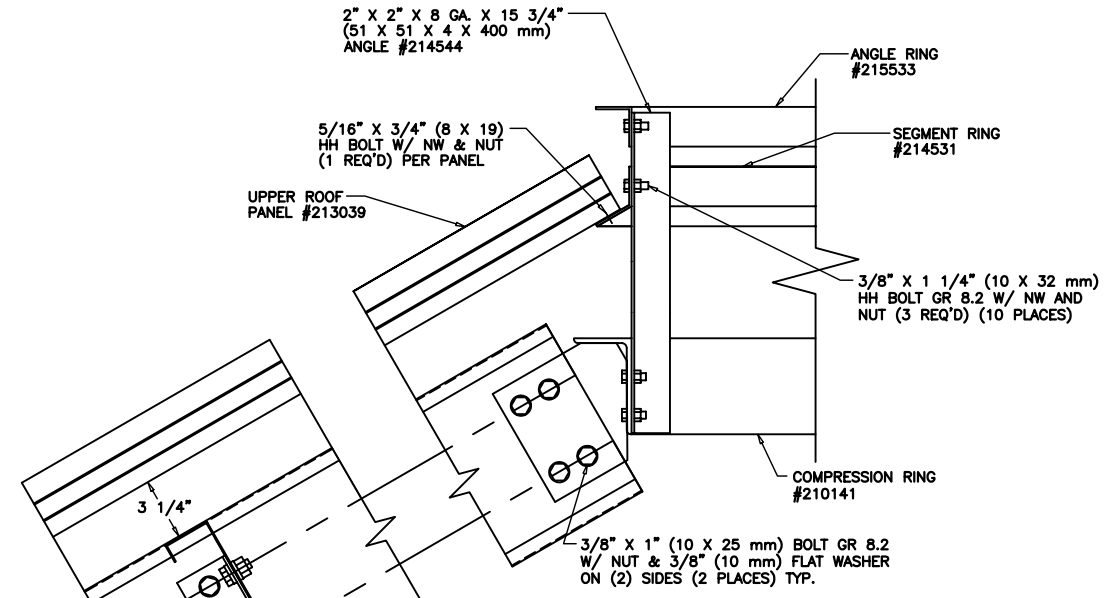

DETAIL 3
ROOF PANEL AND RAFTER TO SEGMENT AND REINFORCED SEGMENT RINGS

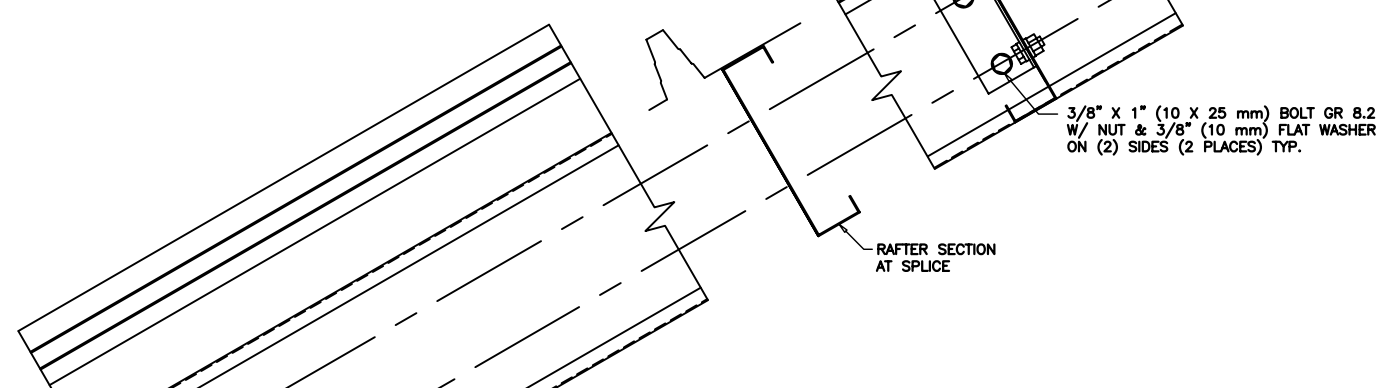

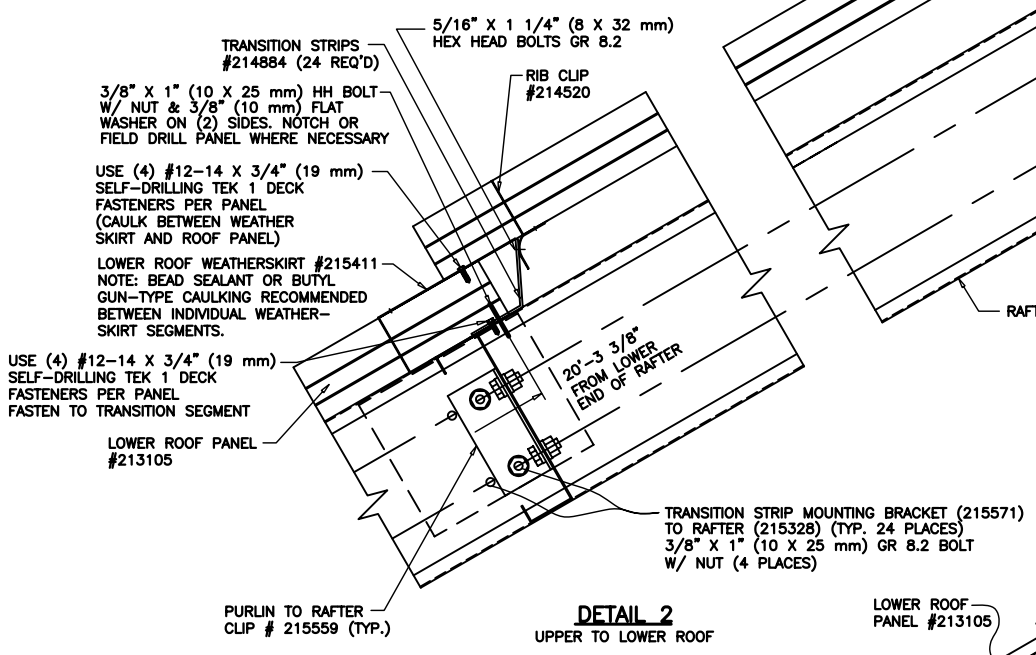

DETAIL 2
UPPER TO LOWER ROOF

DETAIL 6

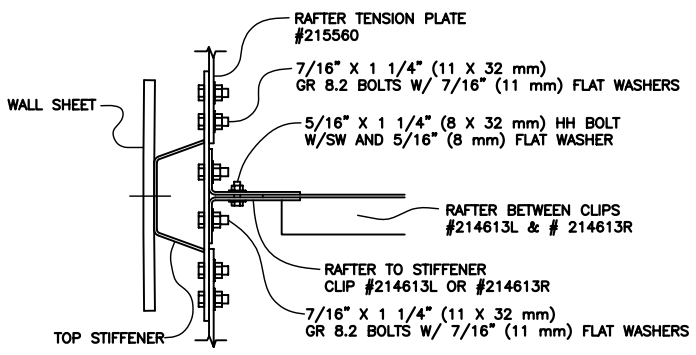

SECTION A-A

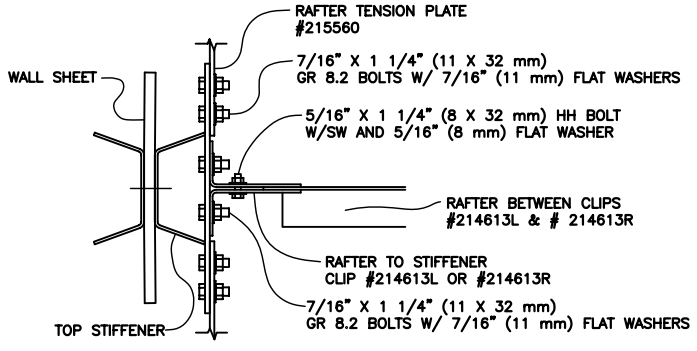

SECTION B-B

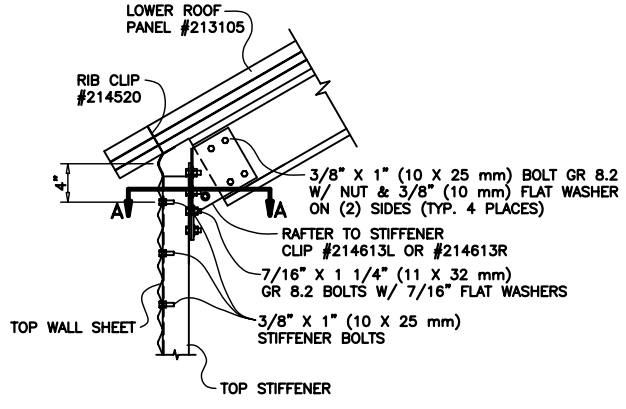

INTERNALLY STIFFENED BIN

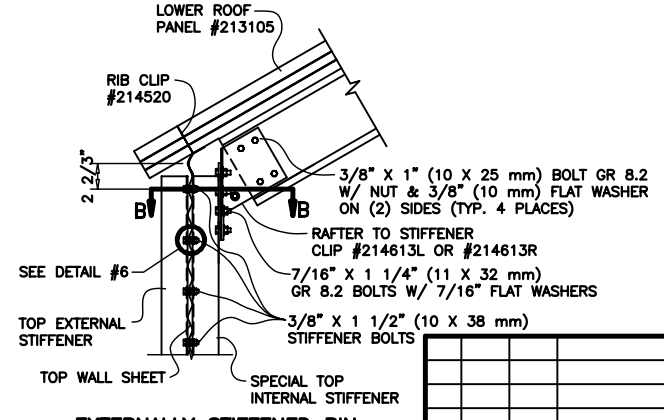

EXTERNALLY STIFFENED BIN

DETAIL 1
RAFTER TO STIFFENER

REV	BY	DATE	DESCRIPTION OF CHANGE
T	JSD	6/12/01	SEE SHEET 3 FOR REVISION

REV	BY	DATE	DESCRIPTION OF CHANGE
R	BW	1/5/01	REVISED RAFTER TO FACE OPPOSITE DIRECTION ADDED TRANSITION STRIP MOUNTING CLIP
P	KY	8/15/00	(1) 10" RAFTER WAS (2) 8"; UPDATED DETAILS
N	SP	6/10/99	DELETED BRACE RODS; UPDATED BOLT CALLOUTS AND DWG
M	SP	10/30/98	UPDATED LOWER ROOF PANEL & LOWER WEATHERSKIRT PART #'S
L	CAH	8/25/98	SEE SHEET 1 FOR REVISION
K	CAH	8/18/98	UPDATED TENSION PLATE CONNECTION
J	CAH	7/20/98	'C' RAFTERS & PURLINS WERE 'Z' STYLE
H	CAH	7/14/98	HEX BOLTS GR 8.2 WERE GR 8 & 5
G	JSD	1/8/97	DETAIL 3, 20'-6 13/16" WAS 15'-6"

SCAFCO Grain Systems Company
6200 E. Main Avenue
PO Box 11215
Spokane, WA 99211-1215, USA
Tel: 509-535-1571 * Fax: 509-535-9130 * mail@scafco.com * www.scafco.com

ALL DIMENSIONS IN INCHES – TOLERANCES – LINEAR ±1/16", ANGULAR ±1° (Except as noted)

72' DIAMETER BIN

ROOF ERECTION INSTRUCTIONS

	BY	DATE	DRAWING NO.:	REV.
DRAWN	D DAY	6/21/82	72ROOF	T
CHECKED				
APPROVED	JT	8/5/98	SCALE: NTS	SHEET: 2 OF 3

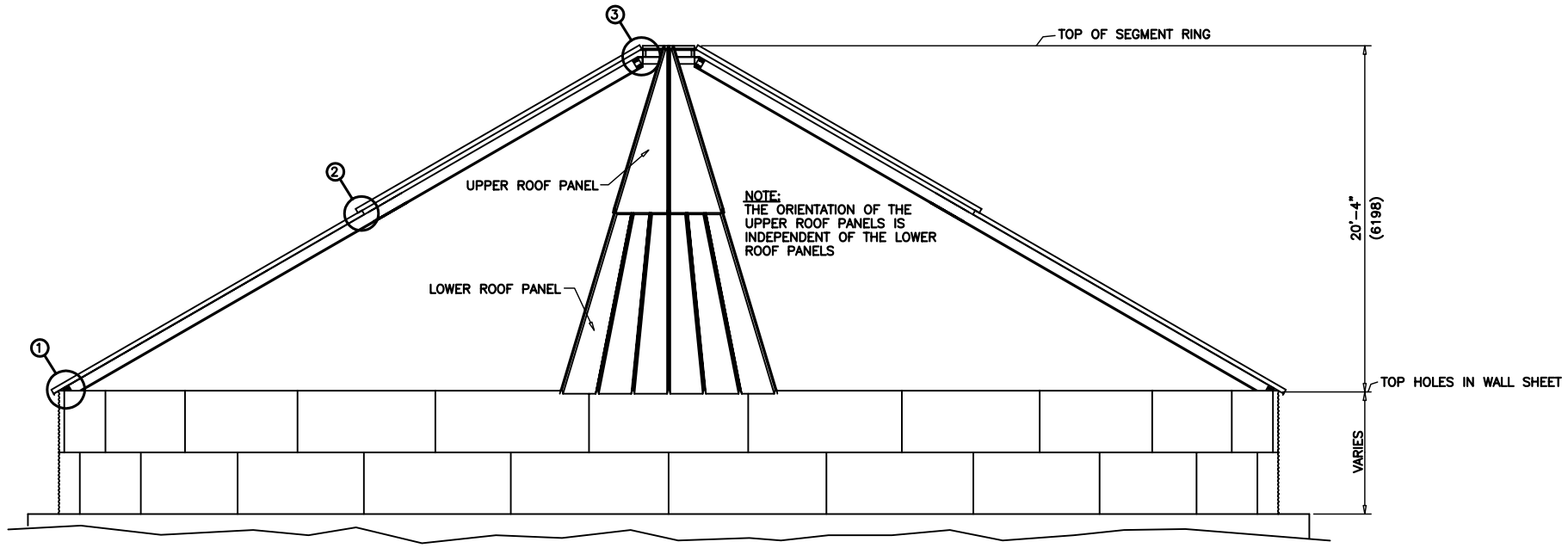

ELEVATION

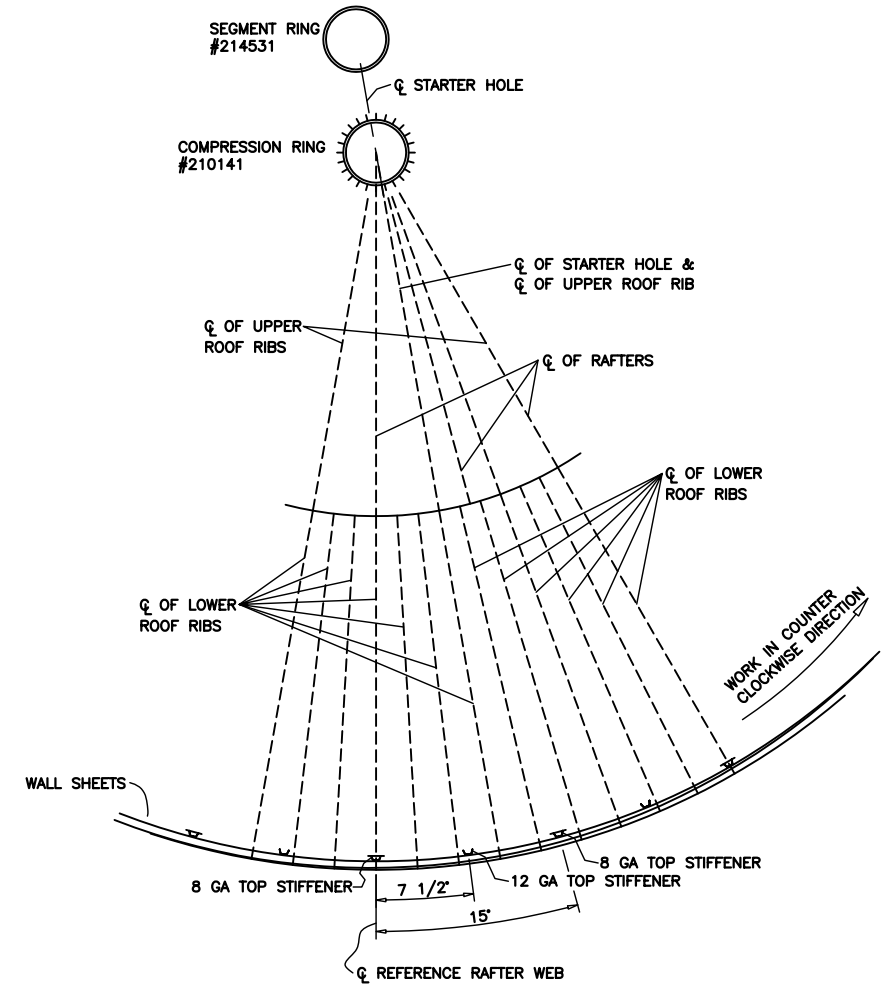

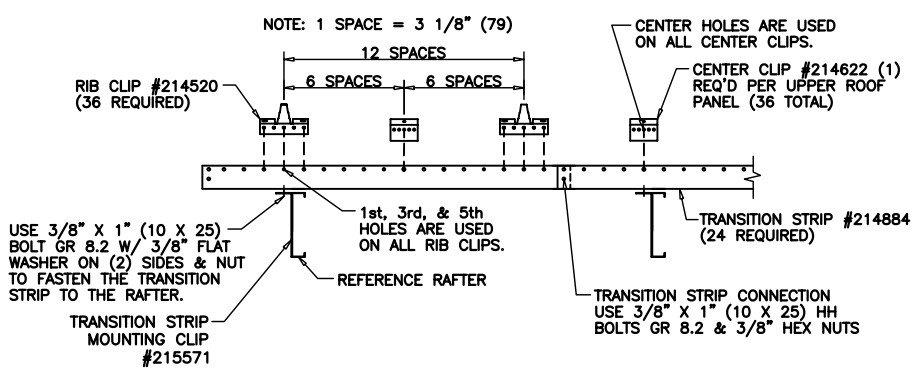

VIEW OF TRANSITION STRIP BETWEEN UPPER & LOWER ROOFS

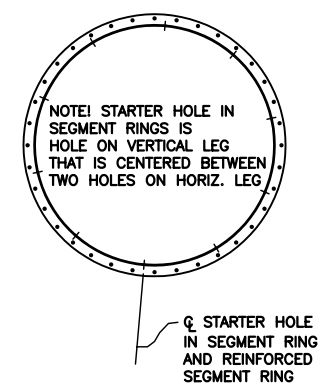

NOTES: –FIELD WELD OR BOLT THE ROOF CAP #210148 TO ANGLE RING #215533.
–BEAD SEALANT OR BUTYL GUN–TYPE CAULKING RECOMMENDED BETWEEN INDIVIDUAL WEATHERSKIRT SEGMENTS.

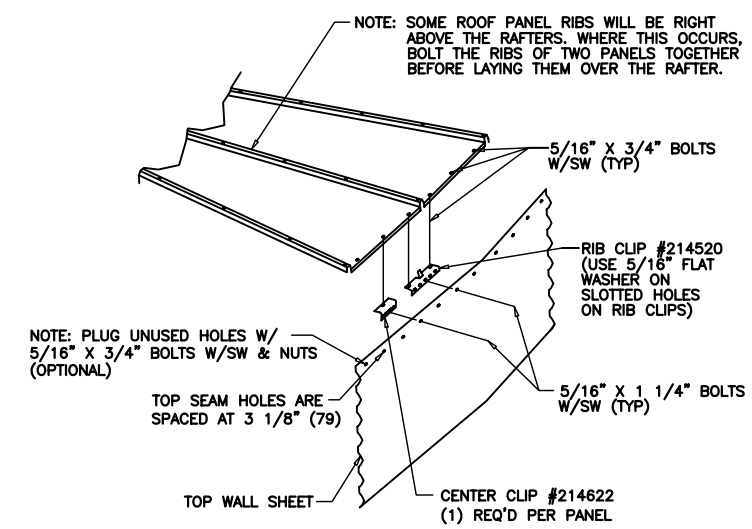

RIB/CENTER CLIP DETAIL

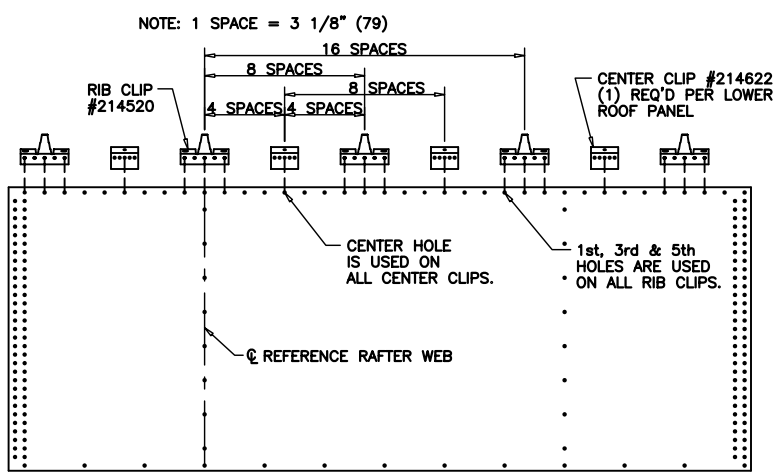

VIEW SHOWING CENTER & RIB CLIP CONNECTION TO TOP WALL SHEET

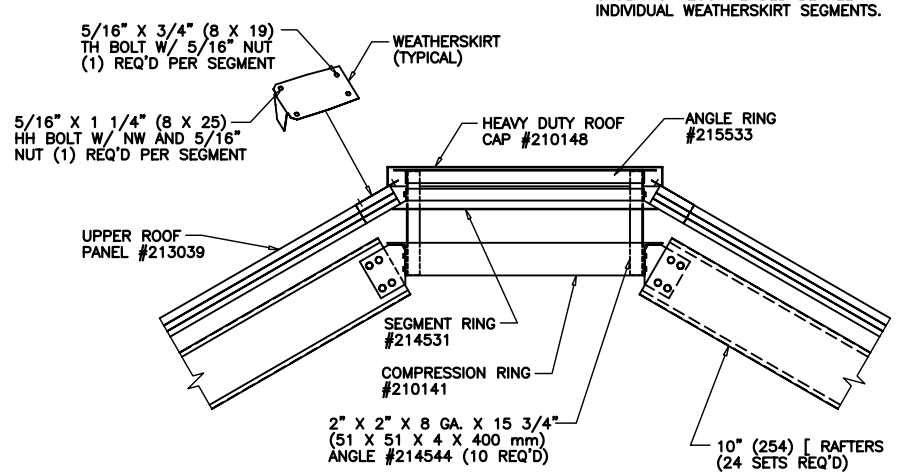

SECTION THRU ROOF CAP

REV	BY	DATE	DESCRIPTION OF CHANGE
T	JSD	6/12/01	20'–4" WAS 20'–4 5/8"

REV	BY	DATE	DESCRIPTION OF CHANGE
R	BW	1/5/01	REV. RAFTER TO FACE OPPOSITE DIRECTION; ADDED TRANSITION STRIP MOUNTING CLIP, CORRECTED RIB CLIP CONN. DWG.
P	KY	8/16/00	REMOVED RAFTER DETAIL; ADDED ANGLE RING; UPDATED RAFTERS AND CLIPS; FULL WALL SHEET DETAIL WAS PARTIAL
N	SP	6/10/99	ADDED TRANS. STRIP & WALL SHT DETAIL; UPDATE DWG
M	SP	10/30/98	SEE SHEET 1 & 2 FOR REVISION
L	CAH	8/25/98	SEE SHEET 1 FOR REVISION
K	CAH	8/18/98	UPDATED 8 GA TOP STIFFENER
J	CAH	7/21/98	[RAFTERS WERE Z STYLE; ADDED RAFTER DETAIL
H	CAH	7/14/98	5/16" X 1 1/4" GR 8.2 BOLTS WERE 1" GR5
G	JSD	1/8/97	SEE SHEET 2 FOR REVISION

SCAFCO Grain Systems Company
6200 E. Main Avenue
PO Box 11215
Spokane, WA 99211–1215, USA
Tel: 509–535–1571 * Fax: 509–535–9130 * mail@scafco.com * www.scafco.com

ALL DIMENSIONS IN INCHES – TOLERANCES – LINEAR ±1/16", ANGULAR ±1° (Except as noted)

72' DIAMETER BIN

ROOF ERECTION INSTRUCTIONS

	BY	DATE	DRAWING NO.:	REV.
DRAWN	D DAY	6/21/82	72ROOF	T
CHECKED				
APPROVED	JT	8/5/98	SCALE: NTS	SHEET: 3 OF 3